FM-01

FM PANEL ANTENNA

FEATURES

- vertical or horizontal polarization
- broadband 87.5 ÷ 108 MHz
- 4.5 dB gain
- directional pattern
- stainless steel dipole

ELECTRICAL DATA

ANTENNA TYPE	FM-01
FREQUENCY RANGE	87 5 ÷ 108 MHz
IMPEDANCE	50 ohm
CONNECTOR	7/8" EIA
MAX POWER	5 kW
VSWR	≤ 1.3
POLARIZATION	Vertical or Horizontal
GAIN (referred to half wave dipole)	4.5 dB
HALF POWER BEAMWIDTH	E-Plane ± 35° H-Plane ± 60°
LIGHTNING PROTECTION	All Metal Parts DC Grounded

MECHANICAL DATA

DIMENSIONS	2000 x 1400 x 1018 mm
WEIGHT	43 kg
WIND SURFACE	0 52 m²
WIND LOAD (at 150 km/h)	0.81 kN
MAX WIND VELOCITY	270 km/h
MATERIALS	Reflector (hot dip galvanized steel) Dipole (stainless steel) Internal parts (silver plated brass, polished brass, deoxidized aluminium) Radome (fiberglass)
ICING PROTECTION	Feed point radome
RADOME COLOUR	Grey (standard)
MOUNTING	Directly on supporting mast or with pipe clamps (not supplied)

RADIATION PATTERNS (Mid Band)

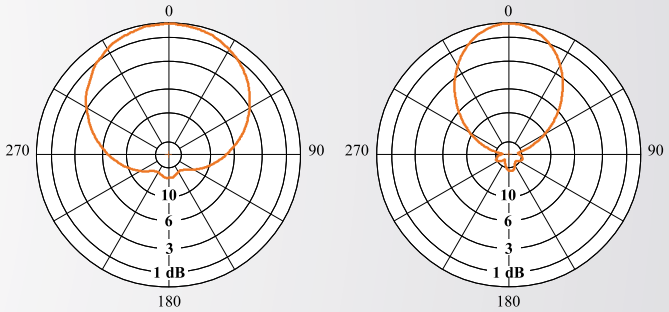

VSWR

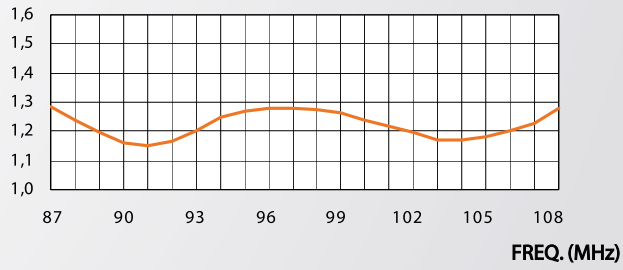

GAIN (dB)

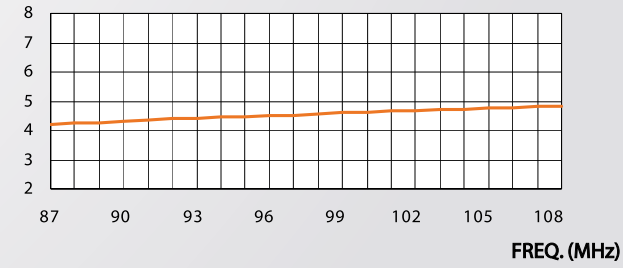

FM-01

FM PANEL ANTENNA

FEATURES

- radiating systems with FM-01
- directional patterns
- high power systems
- broadband 87.5 ÷108 MHz

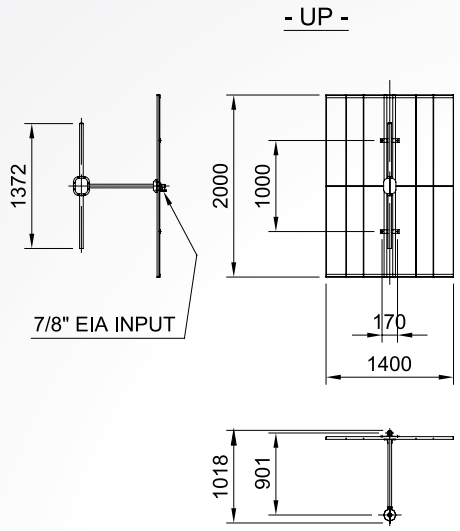

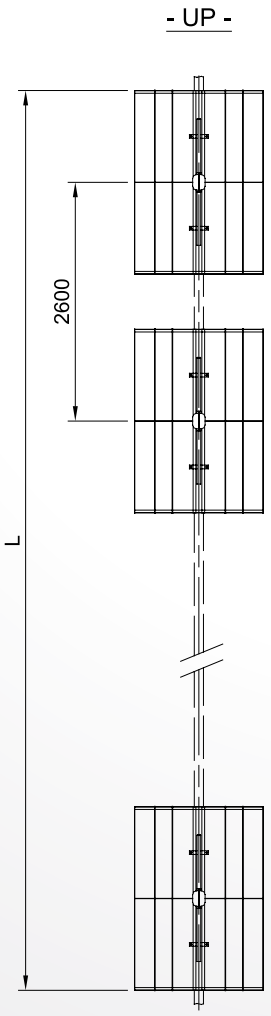

ELECTRICAL DATA

FREQUENCY RANGE	87.5 ÷ 108 MHz
IMPEDANCE	50 ohm
CONNECTOR	EIA flange according to system power rating
POWER RATING	The antenna system can accept any power according to requirements
VSWR	≤ 1 3 Throughout the frequency range (Lower figures for individual channels on request)
POLARIZATION	Vertical or Horizontal
GAIN	Refer to table
VERTICAL PATTERN	Null fill, beam tilt and special requirements to order
OTHER FEATURES	The antenna system can be supplied in split feed configuration (two equal halves). Each half can accept full power.

MECHANICAL DATA

HEIGHT OF ARRAY	Subject to number of bays
TOTAL NET WEIGHT	Refer to table
WIND LOAD	Refer to table
PRESSURIZZABLE	Yes
RADOME COLOUR	Grey (standard)
MOUNTING HARDWARE	Available upon request

TECHNICAL DATA

NUMBER OF BAYS	PANELS PER BAY	GAIN dB (1)	GAIN TIMES (1)	WEIGHT kg (2)	ANTENNA HEIGHT L m	WIND LOAD kN (3)
2	1	7 5	5.6	92	4.6	1.62
4	1	10 5	11.2	178	9.8	3 24
6	1	12.2	16.6	274	15	4.86
8	1	13.5	22 3	372	20.2	6.48
12	1	15.2	33 2	548	30.6	9.72
16	1	16.5	44.6	744	41	12.96

(1) referred to half wave dipole. Losses of power distribution network not included.
(2) without mounting hardware.
(3) v= 150 km/h